PANEL SAWS

English

ROBLAND®

MADE IN BELGIUM

TABLE OF CONTENTS

About Robland ..... 3 - 5

NXZ 6

E300 7

FZ300 8

Options & accessories - E-series 9

Strengths ..... 10 - 11

(C)Z-series ..... 12 - 13

CZ300 14

CZ400 15

CZ500 16

Z300 17

Z400 18

Z500 19

Outrigger tables 20

Options & accessories - Z-series ..... 21 - 22

M500 23

Selection criteria ..... 24 - 25

ROBLAND machines overview ..... 26 - 27

Disclaimer & contact details 28

MADE IN BELGIUM

SINCE 1968

ROBLAND is a privately owned Belgian company, that was founded in 1968 by Robert Landuyt. The first successes were achieved by building affordable qualitative universal woodworking machines, a large part of which are still in use today.

We do have all resources and competencies in house for product development, parts manufacturing, product assembly, sales and after sales support.

With our state of the art, highly automated, parts manufacturing machines we are able to remain cost effective while manufacturing in Belgium near the historical city of Bruges. Although our machines will last for years, this is not enough for us. A quality service and after sales support is key to ROBLANDs success. As we manufacture all machine parts ourselves, you can rely on spare parts always being rapidly available.

Our company mission is to offer woodworking machines with the best quality/price ratio to the high end Do-It-Yourself market and to the small and medium-sized enterprise market.

Our product portfolio, aimed at the second wood processing, includes panel saws, table saws, universal machines, planers, thicknessers, spindle moulders, horizontal mortisers, a semi-automatic boring machine, a CNC boring machine, edgebanders and dust extraction systems.

We have an international dealer network and currently export over 85% of our production worldwide to more than 100 countries. In its 20.000 m² large factory ROBLAND employs over 80 people.

2020
Introduction of small format single operation machines

2018
50th anniversary

Introduction new line of panel saws

2015
Installation of Robot for machine (un)loading

Introduction of NLX410

2012
Introduction of BM3000, ROBLAND's first CNC machine

2011
Introduction of the PS series of panelsaws

Introduction of the Edgebanders

2008
Introduction of Axis Ergo

Extension of the factory to 20.000m²

Introduction of HX- and NX-Series

2006
Introduction of motorised panelsaw NZ3200

2005
Introduction of the S510 planer

2004
New welding hall in factory

2002
Introduction of NLX-Series and D630 thicknesser

2000
Introduction of E300, small panelsaw

1997
Installation of a welding robot

1996
Introduction of ROBLAND planer-thicknesser SD510

1995
First ROBLAND spindle-moulder T120

1992
Introduction of first panelsaw, Z320

1991
Installation of a 6 pallet automated machine center

1989
Installation of lasercutter and automatic lathe for parts manufacturing

1987
Introduction of the X-Series universals

1985
Introduction of the C-Series universals

1978
Relocation of the factory to its actual site

1976
First sales overseas

1972
Commercialisation of first universal machine K210

1968
Robland founded by Robert Landuyt

PRODUCTION

Steel plate laser cutting

Surface planing of cast iron table

Computer assisted steel plate bending

Edge milling of cast iron table

Welding of frame

CNC Machining of cast iron table

Powder coating

CNC Machining of cast iron saw aggregate

Milling of sliding table surface

CNC Manufacturing of steel parts

SUBASSEMBLY

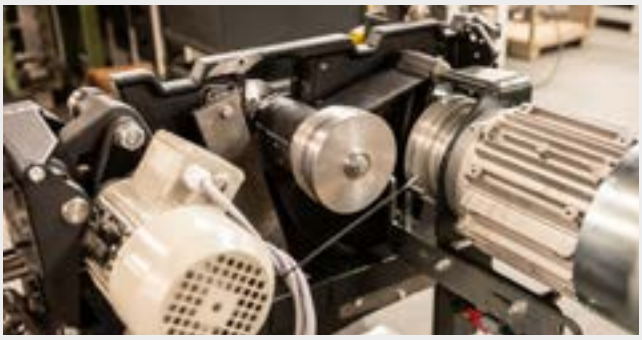

ASSEMBLY

LEVELLING AND ALIGNMENT OF THE SLIDING TABLE

NXZ

NXZ with options

NXZ Technical data

Weight	385 kg
Voltage	230 V mono / 230 V 3 Phase / 400 V 3 Phase
Motor 3 phase	3,7 kW / 5 hp (S6)
Motor single phase	2,2 kW / 3 hp (S6)

Versions	
250 mm	with scoring unit (100 x 20 mm)
315 mm	without scoring unit

Saw	
Saw blade rotation speed	4500 RPM
Diameter saw blade (250 mm version)	250 x 30 mm + 100 x 20 mm scoring unit
Diameter saw blade (315 mm version)	315 x 30 mm
Cutting depth at 45° / 90° (250 mm version)	55 mm / 85 mm
Cutting depth at 45° / 90° (315 mm version)	75 mm / 107 mm
Cutting length	1600 mm (option 2000 mm / 2500 mm)
Cutting width parallel fence	900 mm
Dimensions table	1080 x 410 mm
Dimensons sliding table	1450 mm (option 2050 mm) x 320 mm
Dust extraction outlets	100 mm + 60 mm

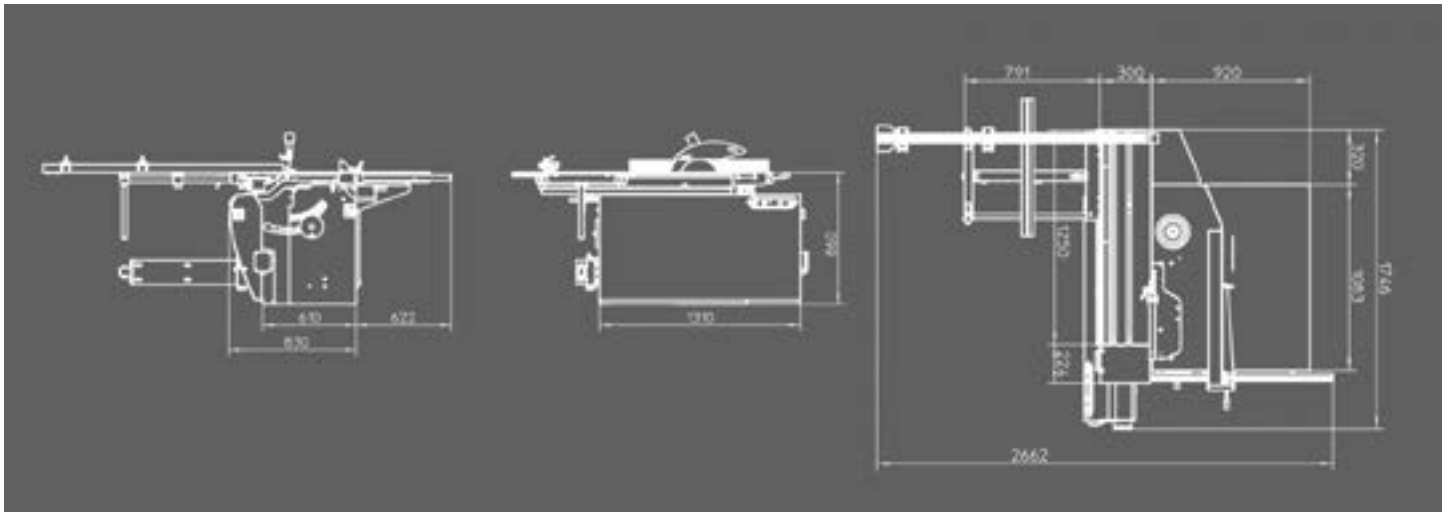

E300

E300 with options

E300 Technical Data

Weight	437 kg
Voltage	230 V mono / 230 V 3 phase / 400 V 3 phase
Motor power 3 phase	4,4 kW / 6,6 hp (S6)
Motor single phase	2,2 kW / 3 hp (S6)
Rotation speed main saw	4500 RPM
Max. saw diameter	300 mm
Max. depth of cut at 90° (45°)	100 mm (70 mm)
Cutting length	1700 mm
Cutting width parallel fence	1200 mm
Sawblade bore	30 mm
Motor power scorer	0,75 kW / 1 hp (S6)
Rotation speed scoring saw	6500 RPM
Scoring sawblade	120 x 20 mm
Cutting depth scorer	4,5 mm
Dimensions sliding table	1700 x 310 mm
Dimensions table extension	720 x 450 mm
Dimensions sawtable	940 x 510 mm
Dimensions cross-cut table	1060 x 510 mm
Dust extraction outlets	100 mm + 60 mm / 100 mm with overhead sawguard

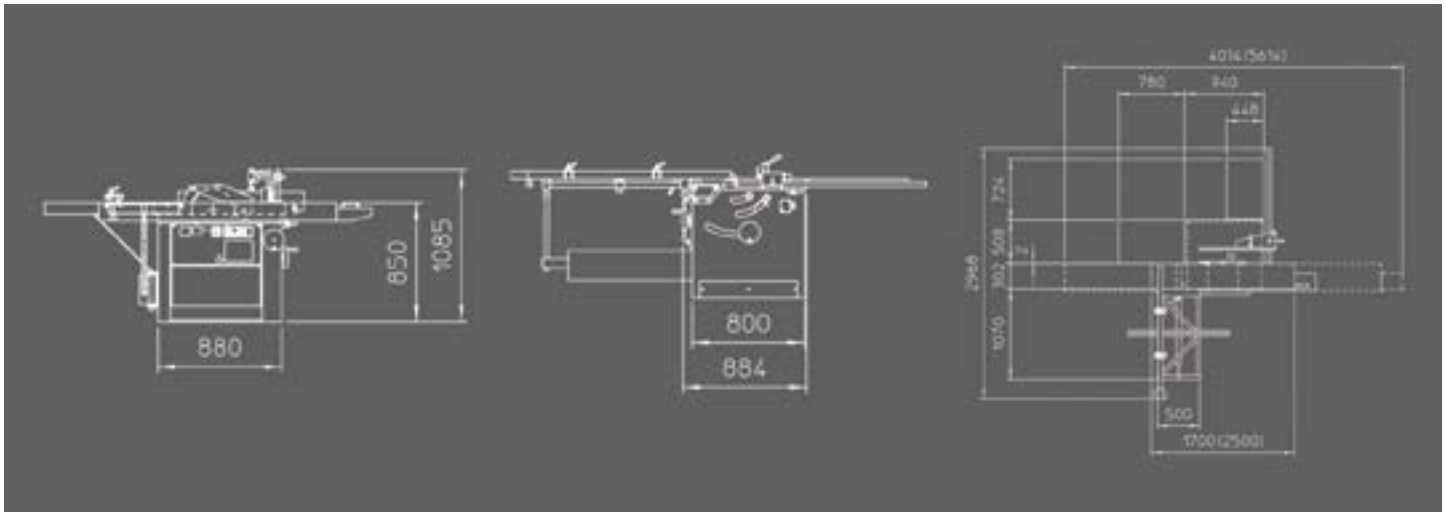

FZ300

FZ300 M with options

FZ300 M / FZ300 EL Technical Data

Weight	680 - 800 kg
Voltage	230 V mono / 230 V 3 phase / 400 V 3 phase
Motor power (3 phase)	4,4 kW / 6,6 hp (S6) - optional 7 kW / 9,4 hp
Motor power single phase	2,2 kW / 3 hp (S6)
Rotation speed main saw	4000 RPM (option 3000 / 4000 / 5000 RPM)
Max. saw diameter	315 mm
Max. depth of cut at 90° - 45°	90 mm (60 mm)
Cutting length	2500 mm (option 3100 mm)
Dimensions sliding table	2200 x 355 mm (option 2800 x 355 mm)
Cutting width	1250 mm (option 1000 mm / 1350 mm)
Sawblade bore	30 mm
Motor power scoring saw	0,75 kW / 1 hp (S6)
Rotation speed scoring saw	6500 RPM
Scoring sawblade (option)	120 x 20 mm
Cutting depth scoring saw	3,5 mm maximum
Dimensions sawtable	985 x 710 mm
Dimensions table extension	710 x 645 mm
Dimensions cross-cut table	970 x 540 mm
Length of swiveling cross cut fence	1565 mm (telescopic to 2550 mm)
Dust extraction outlets	100 mm in frame + 60 mm on sawguard / 100 mm with overhead sawguard

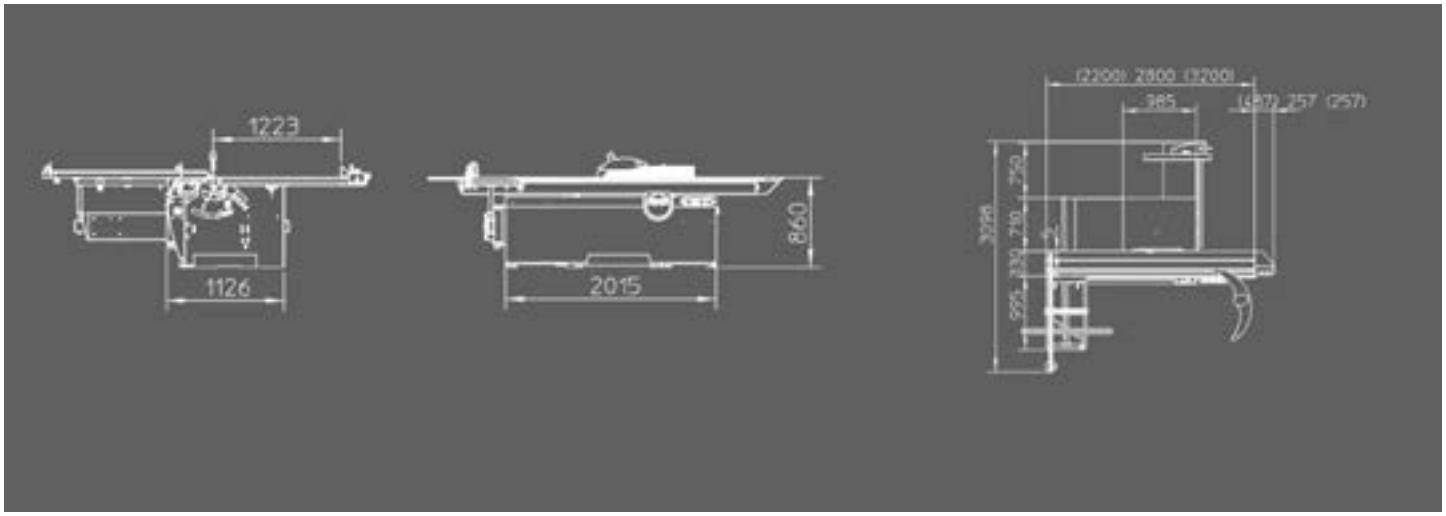

PANEL SAWS
OPTIONS & ACCESSORIES

SUPPORT

Extra support table

Can be positioned anywhere along the aluminium profile of the sliding table. Together with the outrigger table it offers a better support for large panels.

DIGITAL READ-OUTS

Digital read-out on parallel fence with micro adjustment (E300 & FZ300)

This increases ease of use and accuracy.

On the FZ300 a digital read-out on the cross-cut fence is available as well.

OVERHANGING DUST EXTRACTION TUBE

An overhanging dust extraction tube can be mounted on the sawblade protection. It offers a standard dust extraction outlet of 100 mm.

(NXZ, E300, FZ300, Z300)

SAW GUARD

Overhanging saw guard (E300, FZ300 & Z300)

For optimum safety and dust extraction, the overhanging saw guard mechanically adjusts to the height of the workpiece. The arm is easy to turn away.

SCORING UNIT

- Optional on the NXZ & E300
- Standard on the FZ300
- Diameter 120 mm, driven by seperate motor on E300 & FZ300
- Diameter 100 mm, beltdriven on NXZ

(Scoring blade is not included)

STRENGTHS
COMMON TO ALL ROBLAND PANEL SAWS

TORSION TUBE

A torsion tube filled with concrete offers increased rigidity to the frame, absorbs vibrations and functions as a counterweight for the load on the sliding table.

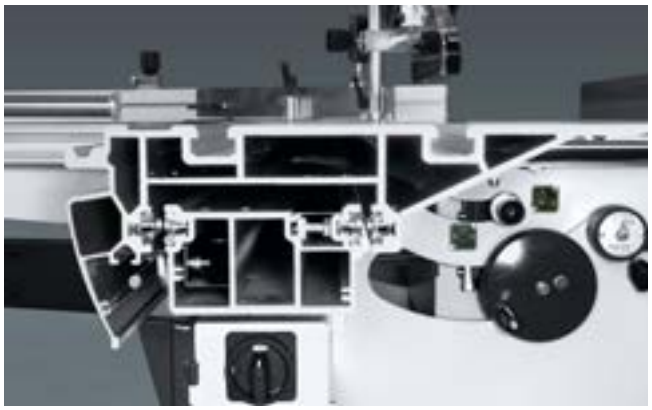

ALUMINIUM SLIDING TABLE WITH BOSS

The aluminium sliding table is completely anodized for better hardness and rust protection. The surface of the sliding table of the Z400 and Z500 is the widest in the industry (426 mm). The Robland bearing system with hard balls on hardened steel round bars (BOSS) and automatic cleaning system ensures a smooth operation.

On every available panel saw of any brand a too hard impact on the carriage inflects an imprint on the lower profile. On any other sliding table, the upper profile has to be dismounted and has to be fixed in a complex way. Thanks to the BOSS-system, the end user can turn the steel round bars himself to obtain a new rolling surface. This way you can enjoy a perfect course of your table for many years.

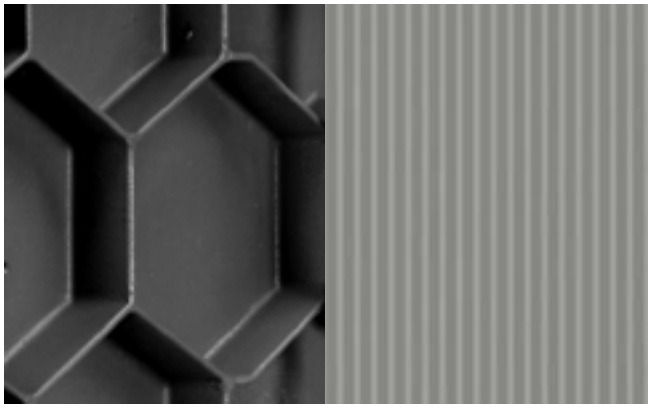

CAST IRON TABLES

Our cast iron tables have a honeycomb structure for the highest strength per weight ratio. The surface is scraped. This technique with low energy dissipation guarantees a very flat surface. Microgrooves are applied for easy gliding of the wooden workpiece on the cast iron table.

OVERHANGING SAW GUARD

For optimal safety and dust extraction, the overhanging saw guard (optionally available as of E300, standard as of Z400 CE) mechanically adjusts to the height of the workpiece. The arm is easy to turn away.

On models with a cutting width of 1500 mm or more between saw and parallel fence, the angled support arm allows the cross cut of longer workpieces with a width of up to 850 mm, perfect for kitchen worktables.

STRENGTHS
SPECIFIC TO THE CZ & Z SERIES

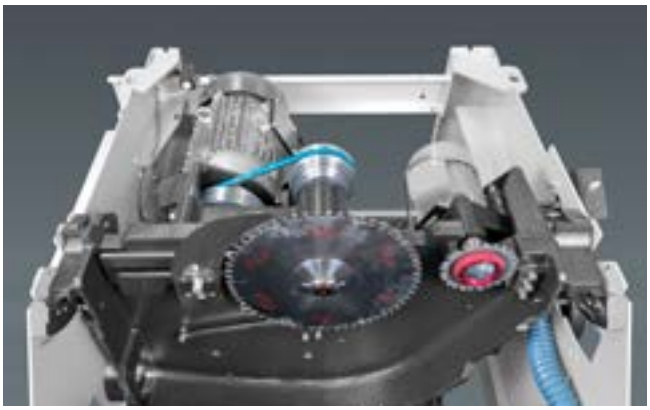

OPTIMIZED SAW AGGREGATE ON CZ SERIES & Z SERIES

The saw aggregate is made out of one piece in cast iron for natural absorption of vibrations and offers more precision and stability. Its aerodynamic design allows for optimal dust extraction. The heavy, cast-iron sawing unit rotates on large shells. The system is maintenance-free and guarantees lifelong accuracy as well as smooth movements.

DIGITAL READ-OUT

The Double Digital Flippers (DDF) system allows for a digital read-out of the position along the full length of the first part of the outrigger fence. It increases both ease of use and accuracy. The right flipper is used for measurements close to the sawblade while the left flipper allows to measure larger panels.

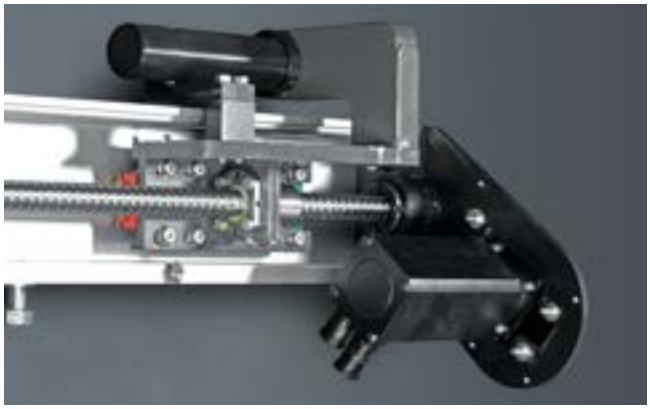

MOTORIZED PARALLEL FENCE

The control of the movement of the parallel fence on a ball screw allows for its very accurate positioning (X1 and X3 versions)

LED STRIP WARNING

On the Z500 models a led strip lights up near the scoring blade when it is in use. This is also available as an option on the CZ400, CZ500 & Z400 models.

(C)Z SERIES
DIFFERENT SAW DIAMETERS

In 2018 ROBLAND launched a new series of panel saws on the basis of different saw diameters, sliding tables and executions.
Here you have an overview:

(C)Z300 Series

Maximum saw blade diameter: 315 mm

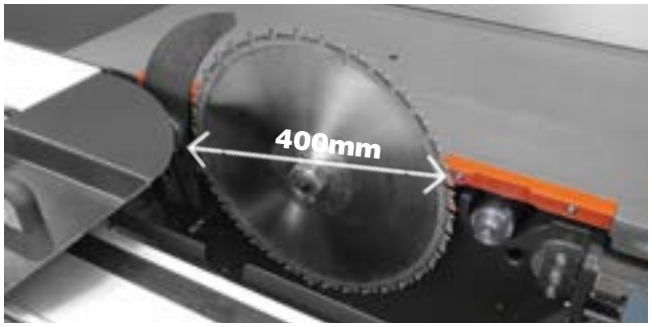

(C)Z400 Series

Maximum saw blade diameter: 400 mm / 350 mm with mounted scoring blade

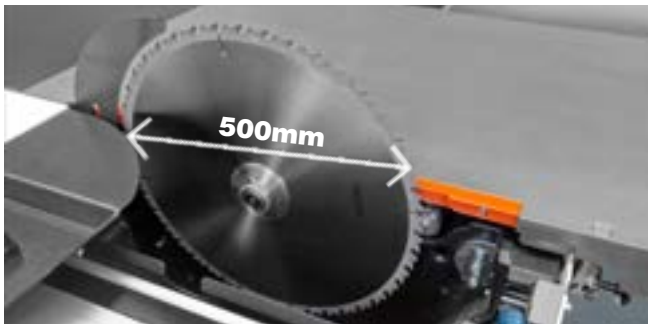

(C)Z500 Series

Maximum saw blade diameter: 500 mm / 350 mm with mounted scoring blade

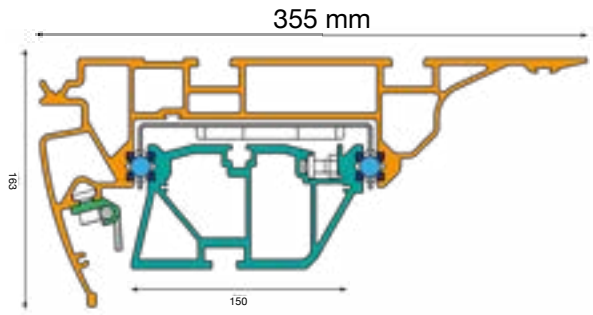

SLIDING TABLE FZ300 & Z300

- Balls on steel bar system (BOSS)
- 6 Years warranty
- 30 steel ball bearings

Available in lengths 2200 / 2800 / 3200 / 3800 mm
Cutting lengths: 2500 / 3100 / 3500 / 4100 mm

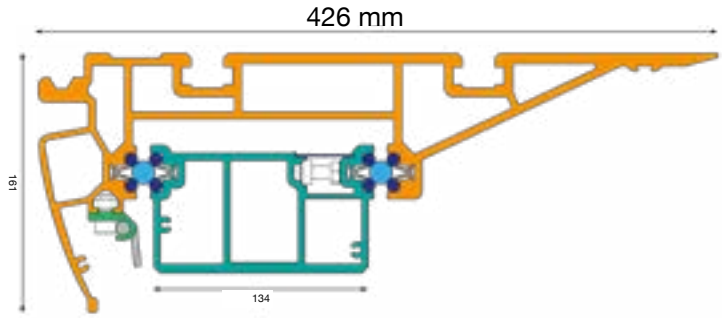

SLIDING TABLE FZ400, Z400 / Z500 & CZ SERIES

- Balls on steel bar system (BOSS)
- 6 Years warranty
- 30 steel ball bearings

Available in lengths: 1595 / 2200 / 3200 / 3800 mm
Cutting lengths: 1600 / 2500 / 3500 / 4100 mm

(C)Z SERIES
DIFFERENT EXECUTIONS

MANUAL (M)

Manual height and tilt adjustment of the saw blade with analogue read-out of inclination of the saw blade.

ELECTRIC (EL)

Electrical height and angle adjustment of the saw blade.

Here pictured with the optional digital read-out of height and inclination of the saw blade.

1 AXIS CONTROL (X1)

Overhanging control panel with:

- 7” state of the art touch screen for numerical control of position of the parallel fence and read-out of height and inclination of the saw blade.
- Push buttons for:
    - Start/stop of the saw blade and scoring blade
    - Height and inclination of the saw blade
    - Emergency stop
- Clipboard for instructions

3 AXIS CONTROL (X3)

Overhanging control panel with 7” state of the art touch screen controlling the position of the parallel fence as well as the height and angle adjustment of the saw blade.

- Push buttons for:
    - Start/stop of the saw blade and scoring blade
    - Emergency stop
- Clipboard for instructions

CZ300

CZ300 with options

CZ300 Technical Data

Weight	640 kg - 750 kg
Voltage	400 V 3 phase (option 230 V 3 phase)
Motor power (3 phase)	4,4 kW / 6,6 hp (S6), option 7 kW / 9,5 hp (S6)
Dust extraction outlets	120 mm in frame + 60 mm in sawguard or 100 mm if overhanging sawguard
Saw	
Saw blade rotation speed	4000 RPM (option 3000 / 4000 / 5000 RPM)
Diameter saw blade and bore	315 mm - 30mm
Sawblade tilting	90° - 45°
Cutting depth at 90° / 45°	90 mm / 60 mm
Cutting width parallel fence version Z300 M, Z300 EL	700 mm (option 1000/1350 mm)
Cutting length	1600 mm (option 2500 mm)
Dimensions cast iron table	985 mm x 710 mm
Dimensions sliding table	420 mm x 1595 mm (option 2200 mm)
Dimensions cross-cut table	970 mm x 540 mm
Length of swiveling cross-cut fence	1565 mm + telescopic extension to 2550 mm
Scoring unit	
Diameter scoring blade and bore	120 mm, 20 mm
Cutting depth with 120 mm diameter blade	3,5 mm
Scoring blade rotation speed	8200 RPM
Scoring saw motor power	0,75 kW / 1hp (S6)

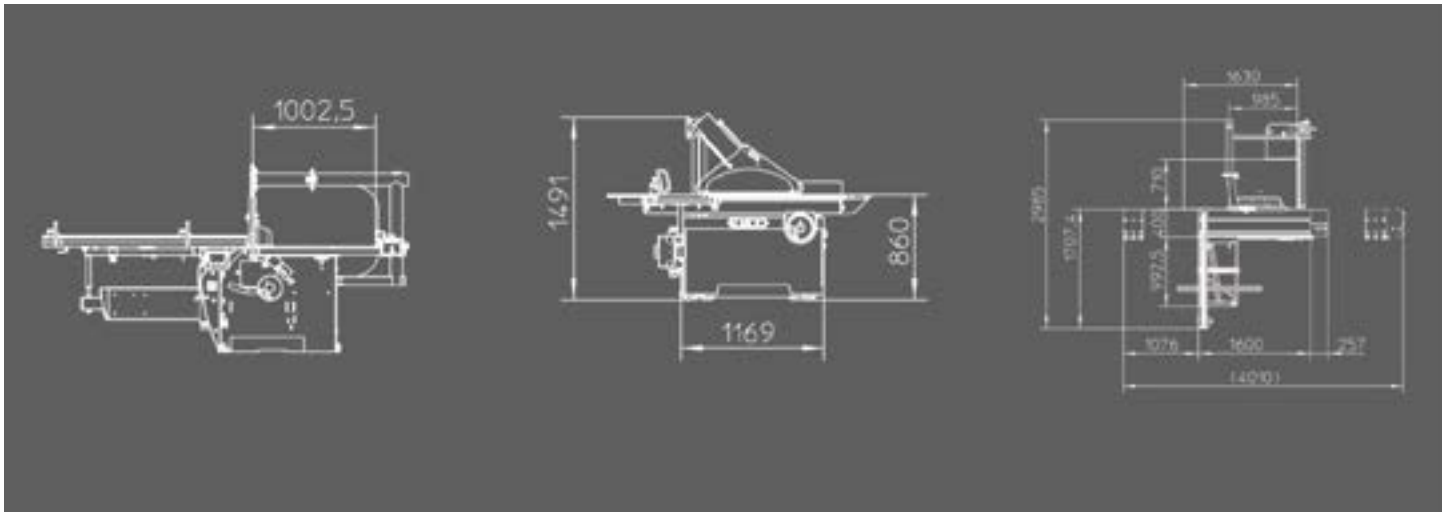

CZ400

CZ400 with options

CZ400 Technical Data

Weight	690 kg - 810 kg
Voltage	400 V 3 phase (option 230 V 3 phase)
Motor power (3 phase)	7 kW /9,5 hp (S6), option 9,2 kW / 14 hp (S6)
Dust extraction outlets	120 mm in frame + 100 mm in overhanging sawguard
Saw	
Saw blade rotation speed	3000 / 4000 / 5000 RPM
Diameter saw blade and bore	300 - 400 mm, 30 mm
Sawblade tilting	90° - 45°
Cutting depth at 90° / 45°	125 mm / 90 mm
Cutting width parallel fence, version CZ400 M, CZ400 EL	700 mm (option 1000/1350 mm)
Cutting width parallel fence, version CZ400 X1, CZ400 X3	830 mm (option 1250 mm)
Cutting length	1600 mm (option 2500 mm)
Dimensions cast iron table	985 mm x 710 mm
Dimensions sliding table	1595 mm (option 2200 mm) x 420 mm
Dimensions cross-cut table	970 mm x 540 mm
Length of swiveling cross-cut fence	1565 mm (telescopic 2550 mm)
Scoring unit	
Diameter scoring blade and bore	120 mm, 20 mm
Cutting depth with 120 mm diameter blade	3,5 mm
Scoring blade rotation speed	8200 RPM
Scoring saw motor power	1,3 kW / 2 hp (S6)

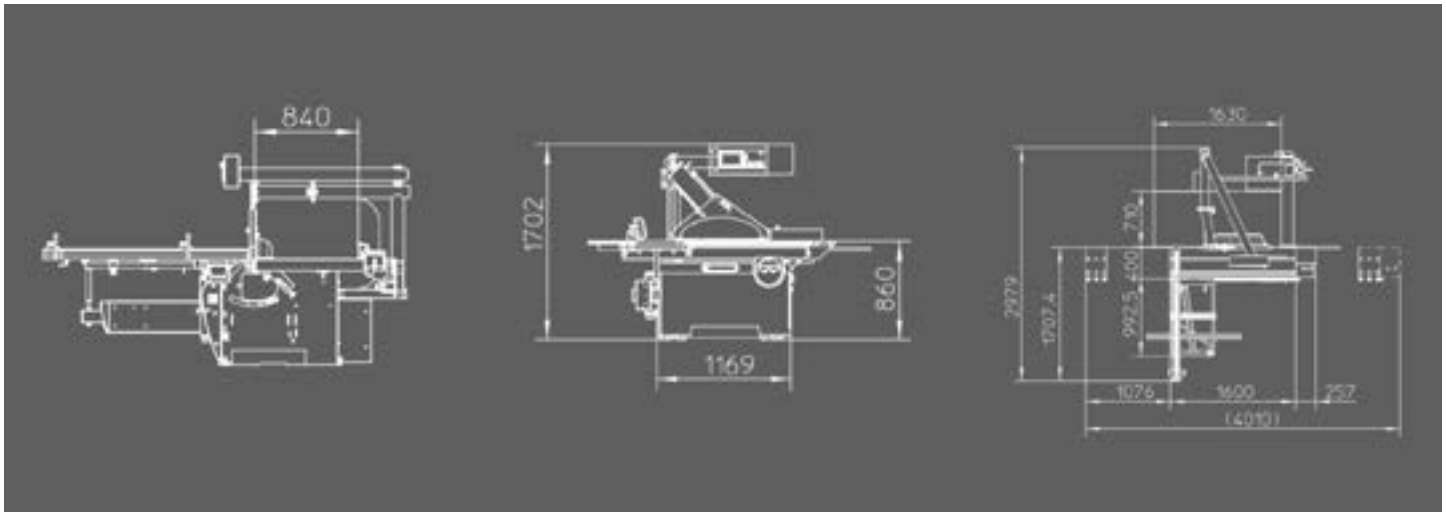

CZ500

CZ500 with options

CZ500 Technical Data

Weight	690 kg - 810 kg
Voltage	400 V 3 phase (option 230 V 3 phase)
Motor power (3 phase)	9,2 kW / 12,5 hp (S6)
Dust extraction outlets	120 mm in frame + 100 mm in overhanging sawguard
Saw	
Saw blade rotation speed	3000 / 4000 / 5000 RPM
Diameter saw blade and bore	300 - 500 mm, 30 mm
Sawblade tilting	90° - 45°
Cutting depth at 90° / 45°	175 mm / 120 mm
Cutting width parallel fence, version CZ500 M, CZ500 EL	700 mm (option 1000/1350 mm)
Cutting width parallel fence, version CZ500 X1, CZ500 X3	830 mm (option 1250 mm)
Cutting length	1600 mm (option 2500 mm)
Dimensions cast iron table	985 mm x 710 mm
Dimensions sliding table	1595 mm (option 2200 mm) x 420 mm
Dimensions cross-cut table	970 mm x 540 mm
Length of swiveling cross-cut fence	1565 mm (telescopic 2550 mm)
Scoring unit	
Diameter scoring blade and bore	120 mm, 20 mm
Cutting depth with 120 mm diameter blade	3,5 mm
Scoring blade rotation speed	8200 RPM
Scoring saw motor power	1,3 kW / 2 hp (S6)

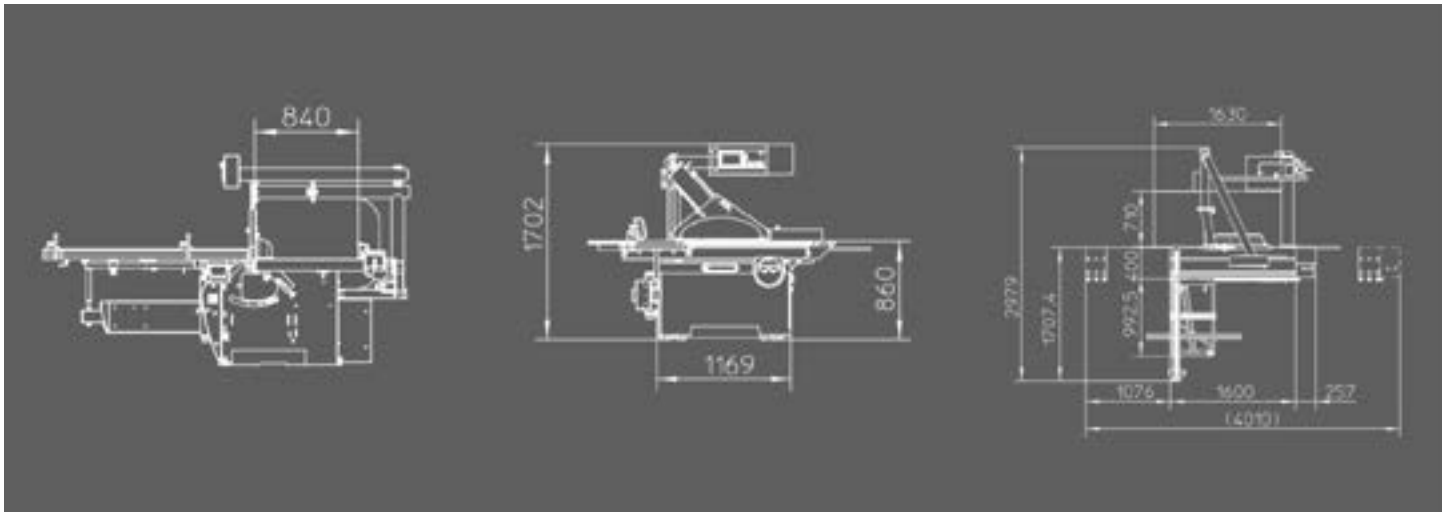

Z300

Z300 with options

Z300 Technical Data

Weight	780 kg - 980 kg
Voltage	400 V 3 phase / 230 V 3 phase
Motor power (3 phase)	4,4 kW / 6,6 hp (S6), option 7 kW / 9,5 hp (S6)
Dust extraction outlets	120 mm in frame + 60 mm in sawguard or 100 mm if overhanging sawguard
Saw	
Saw blade rotation speed	4000 RPM (option 3000 / 4000 / 5000 RPM)
Diameter saw blade and bore	315 mm - 30 mm
Sawblade tilting	90° - 45°
Cutting depth at 90° / 45°	100 mm / 60 mm
Cutting width parallel fence version Z300 M, Z300 EL	1250 mm (option 700 / 1000 / 1350 mm)
Cutting width parallel fence version Z300 X1, Z300 X3	1250 / 1500 mm
Cutting length	3500 mm (option 2500 mm / 3100 mm)
Dimensions cast iron table	985 mm x 710 mm
Dimensions sliding table	355 mm x 3200 mm (option 2200 / 2800 mm)
Dimensions cross-cut table	970 mm x 540 mm
Length of swiveling cross-cut fence	1565 mm + telescopic extension to 2550 mm
Scoring unit	
Diameter scoring blade and bore	120 mm, 20 mm
Cutting depth with 120 mm diameter blade	3,5 mm
Scoring blade rotation speed	8200 RPM
Scoring saw motor power	0,75 kW / 1hp (S6)

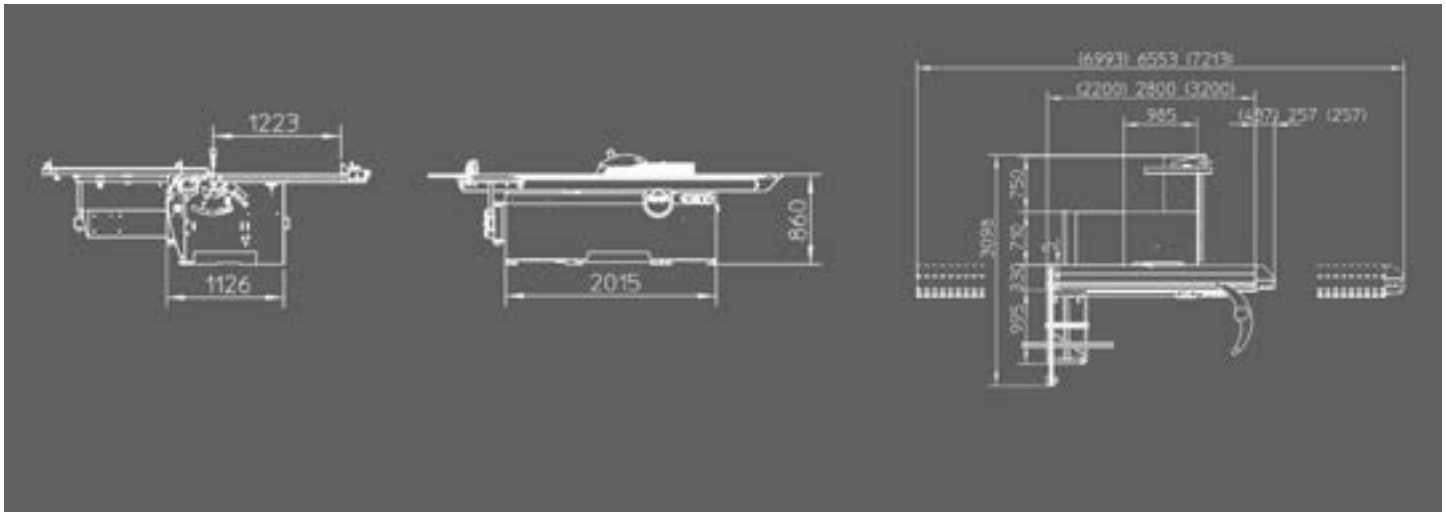

Z400

Z400 with options

Z400 Technical Data

Weight	850 kg (Z400 - 3200) - 1080 kg (Z400 X3 - 3800)
Voltage	400 V 3 phase (option 230 V 3 phase)
Motor power (3 phase)	7 kW /9,5 hp (S6), option 9,2 kW / 14 hp (S6)
Dust extraction outlets	120 mm in frame + 100 mm in overhanging sawguard
Saw	
Saw blade rotation speed	3000 / 4000 / 5000 RPM
Diameter saw blade and bore	300 - 400 mm, 30 mm
Sawblade tilting	90° - 45°
Cutting depth at 90° / 45°	125 mm / 90 mm
Cutting width parallel fence, version Z400 M, Z400 EL	1350 mm (option 1000 / 1525 mm)
Cutting width parallel fence, version Z400 X1, Z400 X3	1250 (option 1500 mm)
Cutting length	3500 mm (option 2500 mm / 4100 mm)
Dimensions cast iron table	985 mm x 710 mm
Dimensions sliding table	3200 (option 2200 mm / 3800) mm x 420 mm
Dimensions cross-cut table	1440 mm x 540 mm
Length of swiveling cross-cut fence	2295 mm (telescopic 3000 mm)
Scoring unit	
Diameter scoring blade and bore	120 mm, 20 mm
Cutting depth with 120 mm diameter blade	3,5 mm
Scoring blade rotation speed	8200 RPM
Scoring saw motor power	1,3 kW / 2 hp (S6)

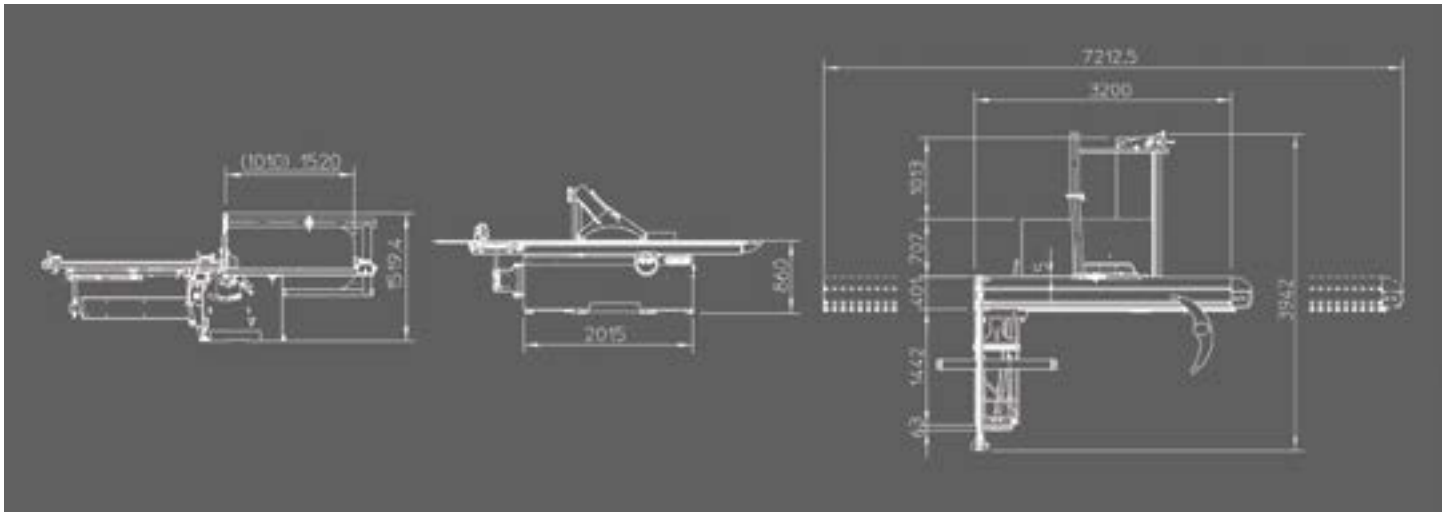

Z500

Z500 with options

Z500 Technical Data

Weight	890 kg (Z500 - 3200) - 1080 kg (Z500 X3 - 3800)
Voltage	400 V 3 phase (option 230 V 3 phase)
Motor power (3 phase)	7 kW / 9,5 hp (S6), option 9,2 kW / 14 hp (S6)
Dust extraction outlets	120 mm in frame + 100 mm in overhanging sawguard
Saw	
Saw blade rotation speed	3000 / 4000 / 5000 RPM
Diameter saw blade and bore	300 - 500 mm, 30 mm
Sawblade tilting	90° - 45°
Cutting depth at 90° / 45°	175 mm / 120 mm
Cutting width parallel fence, version Z500 M, Z500 EL	1350 mm (option 1000 / 1525 mm)
Cutting width parallel fence, version Z500 X1, Z500 X3	1250 (option 1500 mm)
Cutting length	3500 mm (option 2500 mm / 4100 mm)
Dimensions cast iron table	985 mm x 710 mm
Dimensions sliding table	3200 mm (option 2200 mm / 3800 mm) x 420 mm
Dimensions cross-cut table	1505 mm x 760 mm
Length of swiveling cross-cut fence	2295 mm (telescopic 3355 mm)
Scoring unit	
Diameter scoring blade and bore	120 mm, 20 mm
Cutting depth with 120 mm diameter blade	3,5 mm
Scoring blade rotation speed	8200 RPM
Scoring saw motor power	1,3 kW / 2 hp (S6)

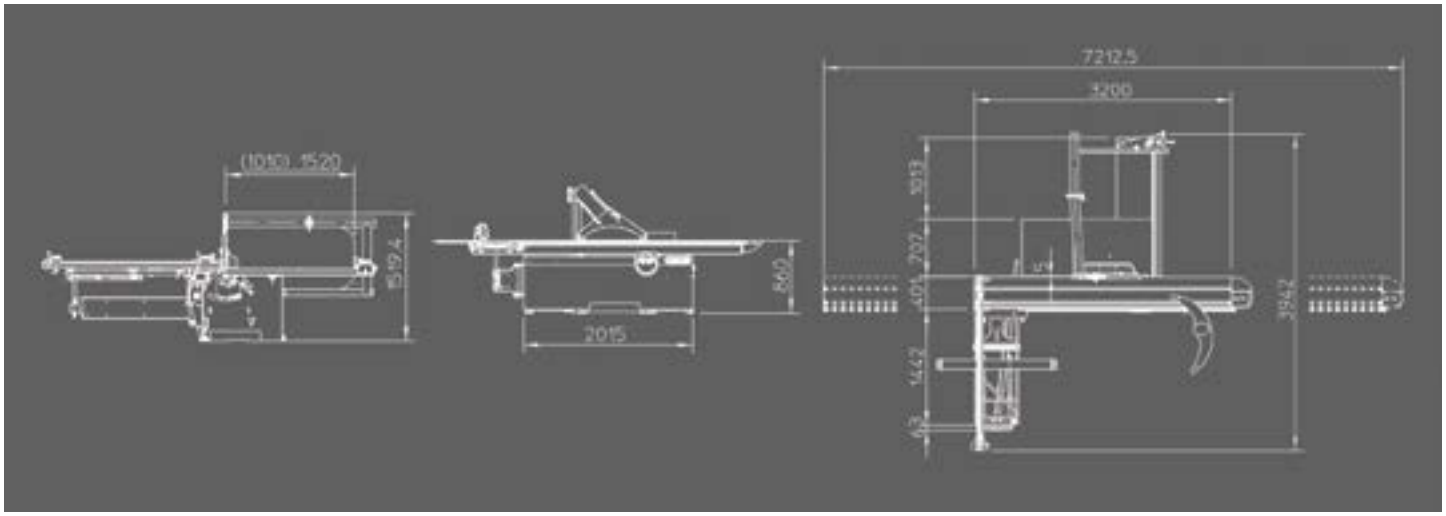

Z SERIES

ROBLAND offers you the choice of different **outrigger tables** on the Z series.

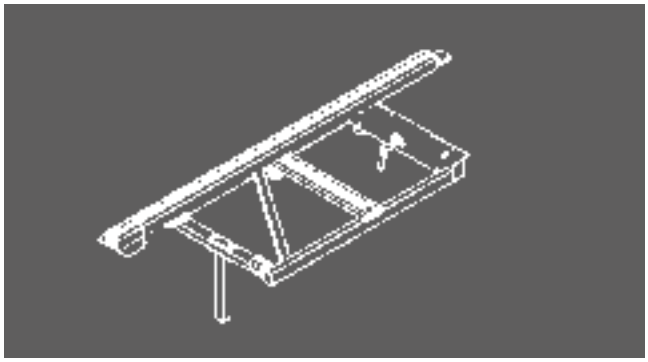

Z300, CZ & FZ

Basic outrigger table (970 x 540 mm) with slanting telescopic cross-cut fence. (1565 - 2550 mm)

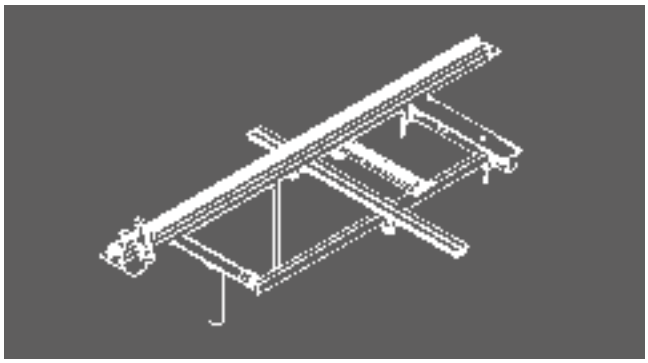

Z400

Large outrigger table (1420 x 650 mm²) with slanting telescopic cross-cut fence (2295 - 3000 mm).

Also available as an option on Z300 & CZ.

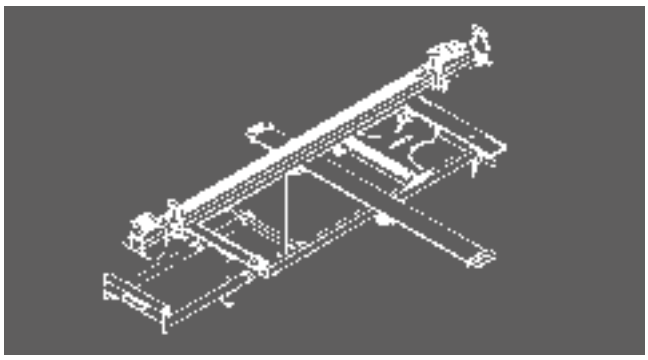

Z400 COMF

Large outrigger table with extension and slanting telescopic cross-cut fence (2295 - 3000 mm). The index system with length correction facilitates accurate sawing of angles and mitre cuts.

Available as an option on Z300, Z400 & CZ.

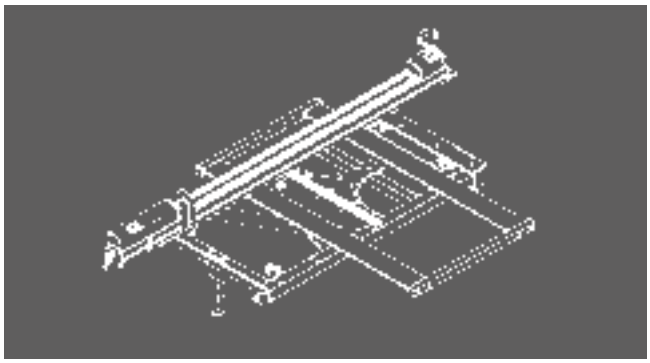

Z500

Luxury outrigger table (1505 x 760 mm²) with extensions in length and width and slanting telescopic cross-cut fence (2295 - 3355 mm). The index system with length correction facilitates accurate sawing of angles and mitre cuts.

Also available as an option on Z400.

OPTIONS

DIGITAL READ-OUT (FZ300 & Z300)

Digtal read-out on parallel fence with micro adjustment.
This increases the ease of use and accuracy.

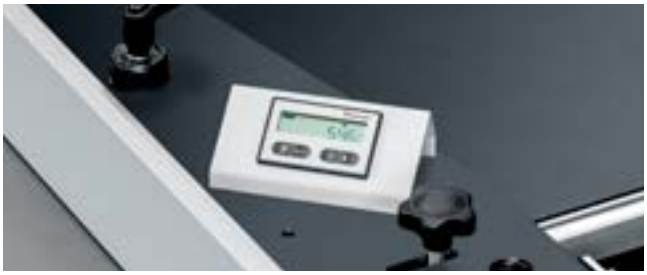

DIGITAL READ-OUT (Z400 / Z500 / CZ)

Digtal read-out on parallel fence with micro adjustment.
This increases the ease of use and accuracy.

This digital read-out is also available on the Z300 when it is equipped with the optional Z400 parallel fence.

DIGITAL READ-OUTS (Z300 / Z400 / CZ)

The Double Digital Flippers (DDF) system allows for a digital read-out of the position along the full length of the first part of the outrigger fence. It increases both ease of use and accuracy. The right flipper is used for measurements close to the sawblade while the left flipper allows to measure larger panels.

This digital read-out is also available on the Z300 when it is equipped with the optional Z400 parallel fence. On the Z400 it is possible to have a second digital read-out on the telescopic part.

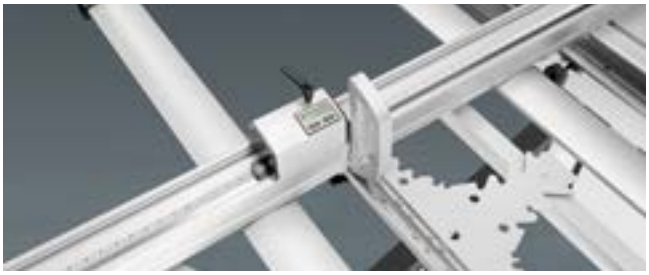

DIGITAL READ-OUTS (Z500)

Digital read-out on flippers. Increases ease of use and accuracy. Through its large size it allows for continuity from base profile to extension. The telescopic part of the profile also has a digital read-out.

REMOTE START-STOP FUNCTION

Additional start-stop buttons for saw and scoring integrated in the sliding table for increased ease of use and safety.

GROOVE CUTTER

On the (C)Z400 and (C)Z500 a preparation for groove cutter is optionally available.

Ability to cut a groove of max. 16 mm wide.

ACCESSORIES

MITRE FENCE

Mitre fence with wood clamp.

Double sided mitre fence.

ADJUSTABLE SCORING BLADE

“LEADER” scoring blade with adjustable width to match the main saw.

SUPPORT TABLES

Extra support table

Can be positioned anywhere along the aluminium profile of the sliding table. Together with the outrigger table it offers a better support for large panels.

Extra support table with rip fence on ruler for long narrow strips.

Can be positioned anywhere along the aluminium profile of the sliding table. Together with the outrigger table it offers a better support for large panels.

DUST EXTRACTION TUBE AND OVERHANING SAW GUARD ON NXZ, E300, E2500 & (C)Z300

An overhanging dust extraction tube can be mounted on the sawblade protection. It offers a standard dust extraction outlet of 100 mm.
For optimal safety and dust extraction, the overhanging saw guard mechanically adjusts to the height of the workpiece. The arm is easy to turn away.

M500

M500 with options

M500 Technical Data

Weight	550 kg
Voltage	400 V (option 230 V)
Motor power (3 phase)	9,2 kW / 12 hp (S6)
Dust extraction outlets	120 mm in frame + 100 mm in overhanging sawguard
Saw	
Saw blade rotation speed	3000 RPM
Diameter saw blade	500 mm
Sawblade tilting	90° - 45°
Cutting depth at 90° / 45°	175 mm / 120 mm
Cutting width	1000 mm (option 1350 mm)
Cutting length	1300 mm (option 2500 mm)
Dimensions cast iron table	985 mm x 710 mm
Dimensions sliding table	1150 mm (option 2200 mm) x 420 mm
Dimensions cross-cut table (option)	970 mm x 540 mm
Length of swiveling cross-cut fence on optional cross cut table	1565 mm (telescopic 2550 mm)

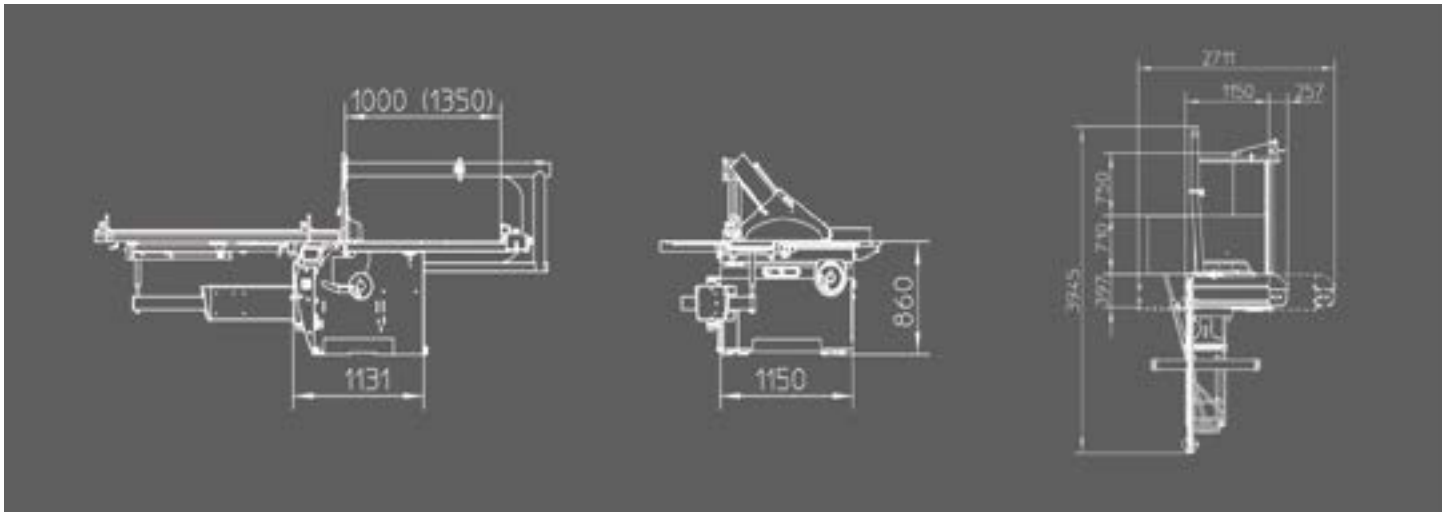

PANEL SAWS
OVERVIEW

	NXZ	E300	FZ300 M	FZ300 EL
Machine basics				
Manual	X	X	X	X
Electrical height and tilt	-	-	-	-
1 Axis controll (parallel fence)	-	-	-	-
3 Axis controll (parallel fence + height + tilt)	-	-	-	-
Motor powers (S6)				
Single phase 2,2 kW	O	O	O	O
3,7 kW - 3 * 400 V	S	S	-	-
3,7 kW - 3 * 220 V	O	O	-	-
4,4 kW - 3 * 400 V	-	-	S	S
4,4 kW - 3 * 220 V	-	-	O	O
7 kW - 3 * 400 V	-	-	O	O
7 kW - 3 * 220 V	-	-	-	-
9,2 kW - 3 * 400 V	-	-	-	-
9,2 kW - 3 * 220 V	-	-	-	-
Saw aggregate max. diameter				
250 mm	O	-	-	-
300 mm	-	S	-	-
315 mm	S	-	S	S
400 mm	-	-	-	-
500 mm	-	-	-	-
Scoring unit	O	S	S	S
Speeds on saw				
4000 RPM	-	-	S	S
4500 RPM	S	S	-	-
3000 / 4000 / 5000 RPM	-	-	O	O
Cutting length				
1280 mm	-	-	-	-
1600 mm	S	-	-	-
1700 mm	-	S	-	-
2000 mm	O	-	-	-
2500 mm	O	-	S	S
2800 mm	-	-	-	-
3100 mm	-	-	O	O
3500 mm	-	-	-	-
4100 mm	-	-	-	-
Cutting width parallel fence				
650 mm	-	-	-	-
700 mm	-	-	-	-
830 mm	-	-	-	-
900 mm	S	-	-	-
1000 mm	-	-	O	O
1250 mm	O	S	S	S
1350 mm	-	-	O	O
1500 mm	-	-	-	-
Digital readout				
Outrigger table	-	-	O	O
Parallel fence	-	-	O	O
Overhead saw guard	-	O	O	O
Remote control in sliding table	-	-	-	-

SCE = Standard on CE-version (optional on non-CE) / S = Standard / X = Present / O = Optional

CZ SERIES	Z300M/EL	Z300X1/X3	Z400M/EL	Z400X1/X3	Z500M/EL	Z500X1/X3	M500
M	M	-	M	-	M	-	M
EL/X1	EL	X1	EL	X1	EL	X1	EL
X1	-	X1	-	X1	-	X1	-
X3	-	X3	-	X3	-	X3	-
O(CZ300)	O	-	-	-	-	-	-
-	-	-	-	-	-	-	-
-	-	-	-	-	-	-	-
CZ300	S	S	-	-	-	-	-
O(CZ300)	O	O	-	-	-	-	
CZ400/O(CZ300)	O	O	S	S	S	S	-
O(CZ300/CZ400)	O	O	O	O	O	O	-
CZ500/O(CZ400)	-	-	O	O	O	O	S
O(CZ400/CZ500)	-	-	O	O	O	O	O
-	-	-	-	-	-	-	-
-	-	-	-	-	-	-	-
CZ300	S	-	-	-	-	-	-
CZ400	-	-	S	S	-	-	-
CZ500	-	-	-	-	S	S	S
S	S	S	S	S	S	S	-
CZ300	S	S	-	-	-	-	-
-	-	-	O	O	O	O	-
CZ400/CZ500	O	O	S	S	S	S	S
O(CZ300)							
-	-	-	-	-	-	-	S
S	-	-	-	-	-	-	-
-	-	-	-	-	-	-	-
-	-	-	-	-	-	-	-
O	O	O	O	O	O	O	O
-	-	-	-	-	-	-	-
-	O	O	-	-	-	-	-
-	S	S	S	S	S	S	-
-	O	O	O	O	O	O	-
O(M/EL)	-	-	-	-	-	-	-
-	O	-	-	-	-	-	-
S (X1/X3)	O	-	-	-	-	-	S
S(M/EL)	-	-	-	-	-	-	-
O(M/EL)	O	O	O	-	O	-	O
O(X1/X3)	S	S	-	S	-	S	-
O(M/EL)	O	O	S	-	S	-	O
-	-	-	O	O	O	O	-
O	O	O	O	O	O	O	O
O	O	S	O	S	O	S	O
SCE(CZ400/CZ500)	O	S	SCE	S	SCE	S	SCE
O(CZ300)							
O	O	O	O	O	O	O	O

PANEL SAWS

NXZ

E300

CZ SERIES

FZ SERIES

Z400 SERIES

Z500 SERIES

PLANER - THICKNESSERS

NXSD310

SD410

SD510

PLANERS

KS410

S410

J510

THICKNESSERS

D510

D630

HORIZONTAL SLOT MORTISER

LBM

SPINDLE - MOULDERS

KBM

KT30 PRO

T120S

TABLE SAW

T120L

T120P

M500

COMBINED MACHINES

HX260

HX310 PRO

NX310/410 PRO

NLX310/410 PRO

NXTZ PRO

NLXTZ PRO

DRILLING MACHINES

BM21 PRO

BM3000

EDGEBANDERS

KM575

This brochure is for information purposes only. Robland reserves the right to modify machine configurations and specifications without prior notice. Standard configurations can change over time and by point of purchase. Please consult your local dealer for accurate and up to date information.

Robland NV
Kolvestraat 44
8000 Brugge - Belgium
Tel: +32 50 458 925
info@robland.com
www.robland.com

Follow us on Facebook
www.facebook.com/Roblandmachines

Follow us on Instagram
www.instagram.com/robland_nv

Follow us on YouTube
www.youtube.com/robland